METRIS typ 3

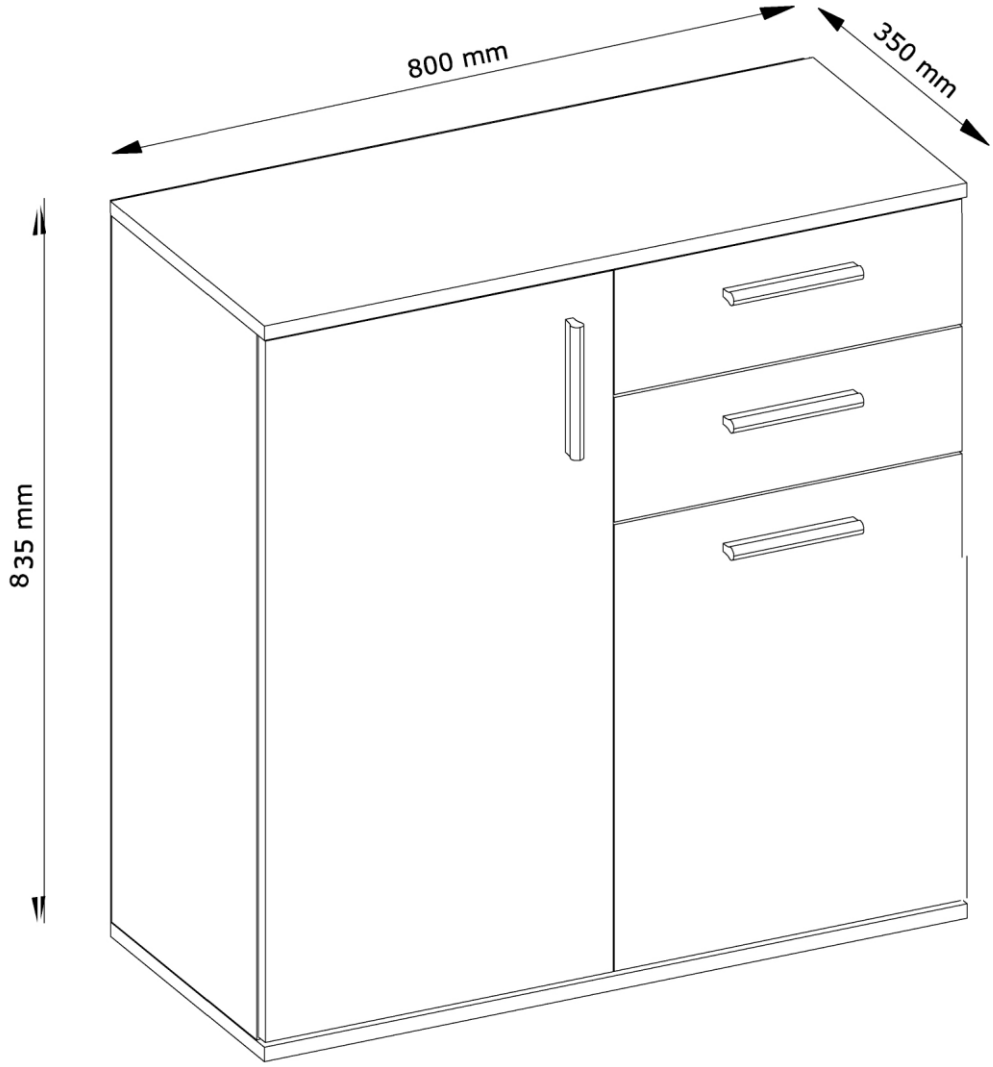

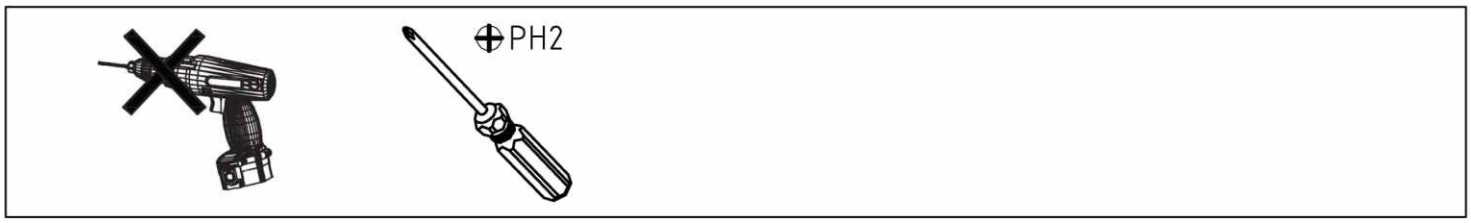
PH2

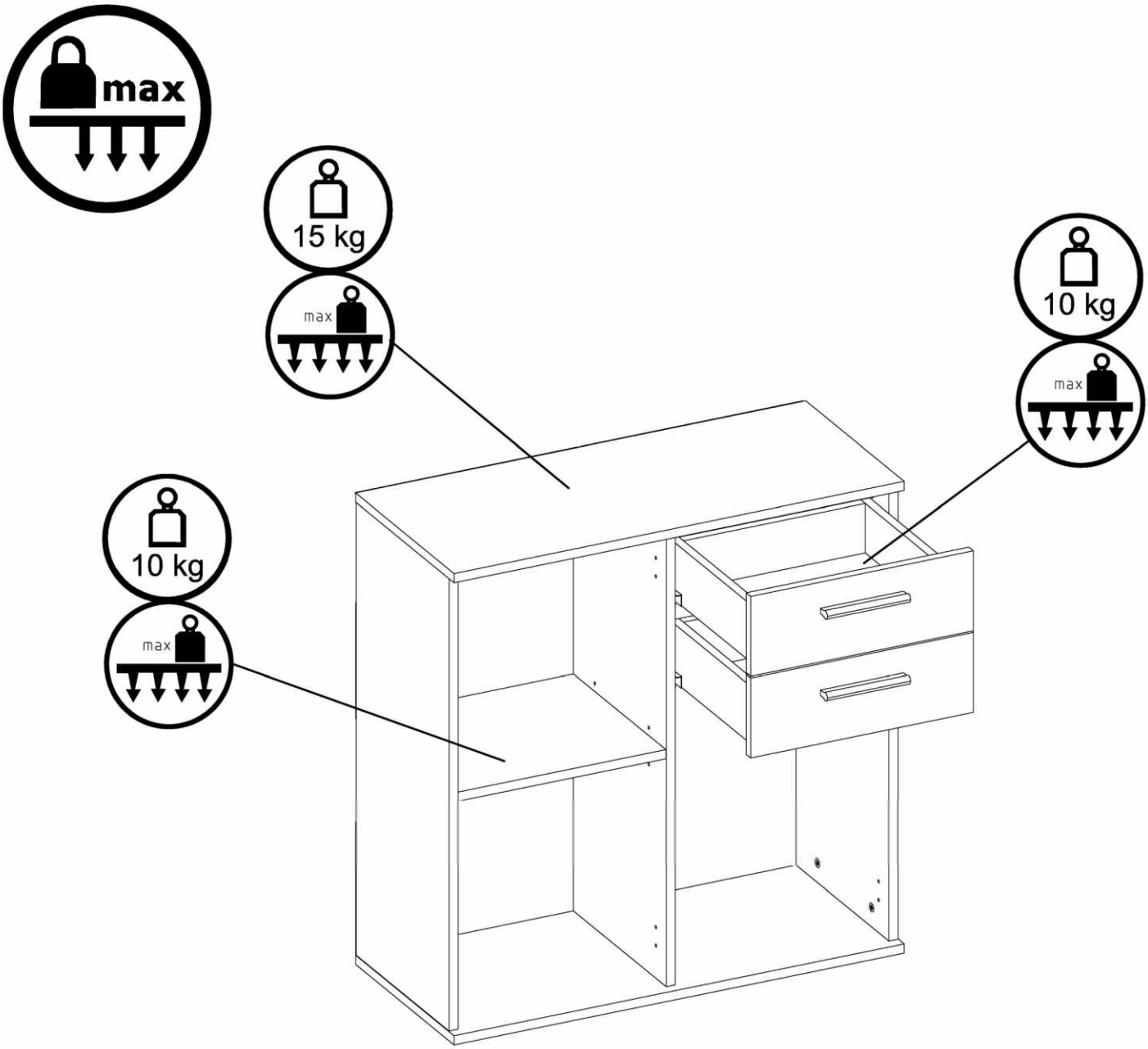
max
15 kg
max
10 kg
max
10 kg
max

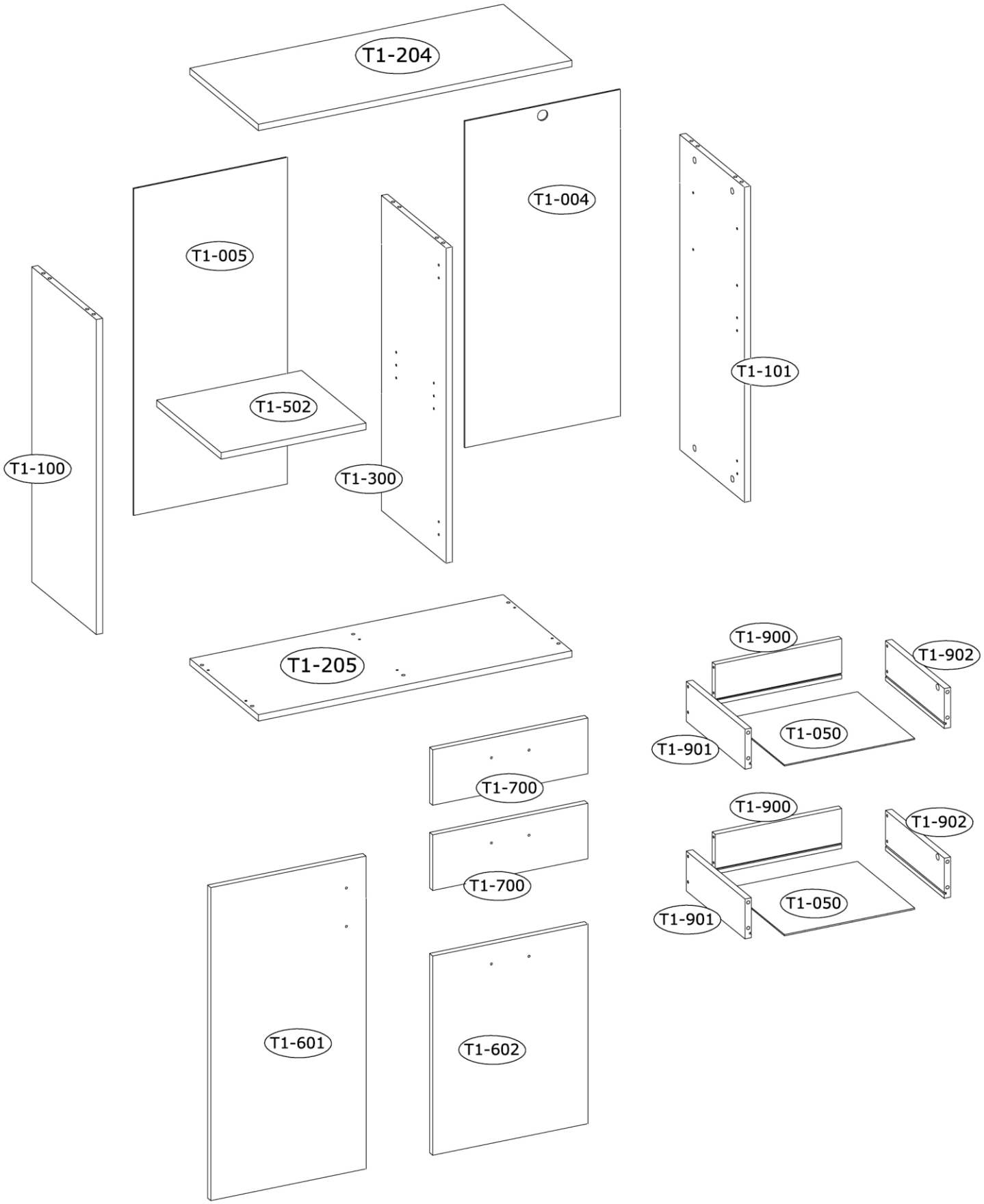
T1-204
T1-004
T1-005
T1-101
T1-502
T1-100
T1-300
T1-205
T1-900
T1-902
T1-050
T1-901
T1-700
T1-900
T1-902
T1-700
T1-050
T1-901
T1-601
T1-602

Ø6.5x36.5mm A-16	Ø15x16mm B-16	C-16	Ø8x30mm D-16
F-8	75x35x15mm R-1	Ø5 mm E-4	Ø3,5x16mm J-18
Ø4.0x25mm M-8	Ø3.5x20mm N-5	Ø6.0x16mm O-8	G-21
L1-5	Z-5	W-4	KR-4
PR-2			

KR1 + KR2 = KR

1.

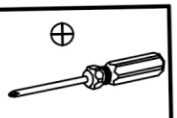

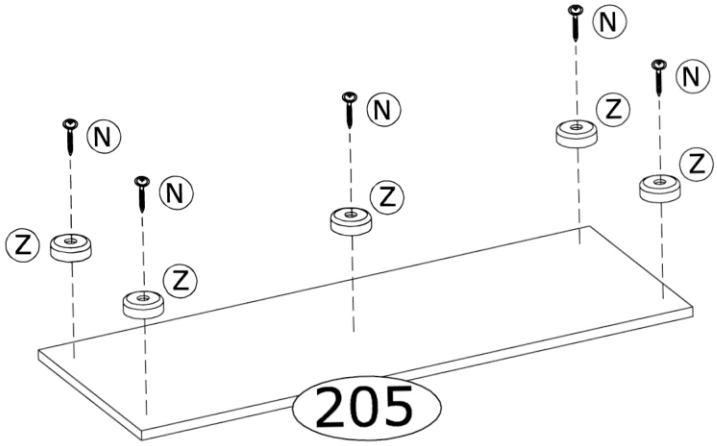

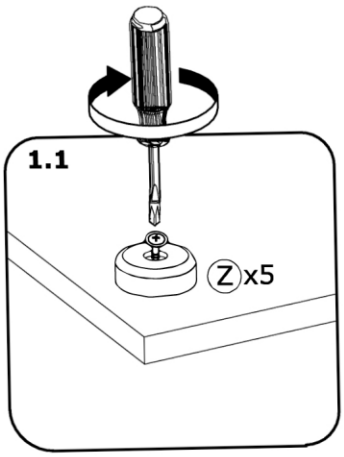

2.

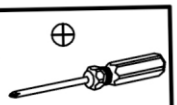

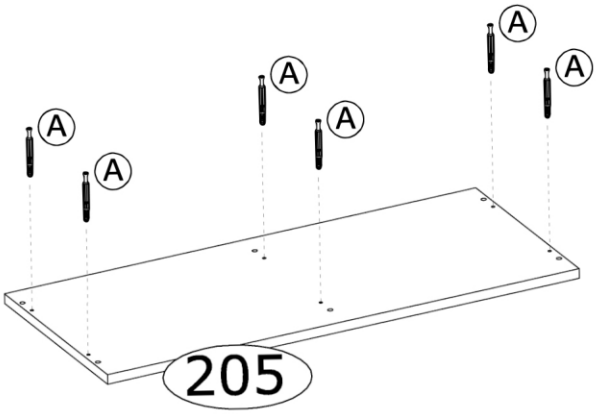

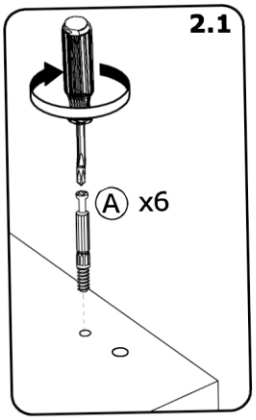

3.

A-6

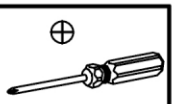

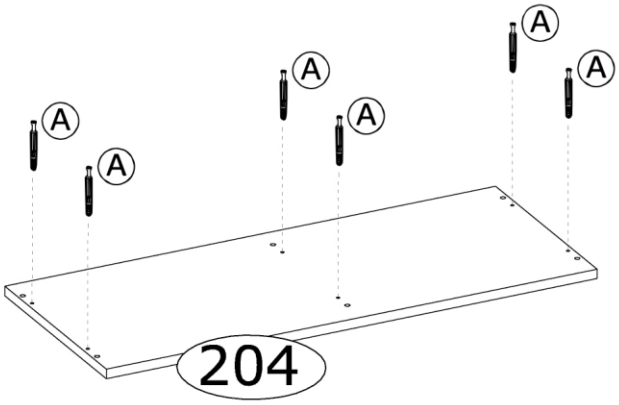

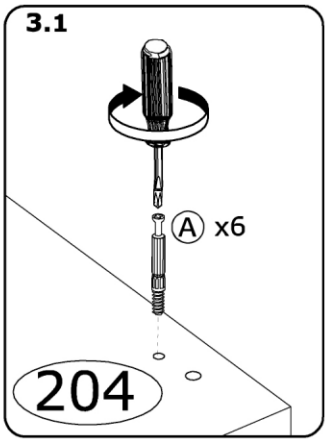

4.

B-4

D-4

E-2

KR1-2

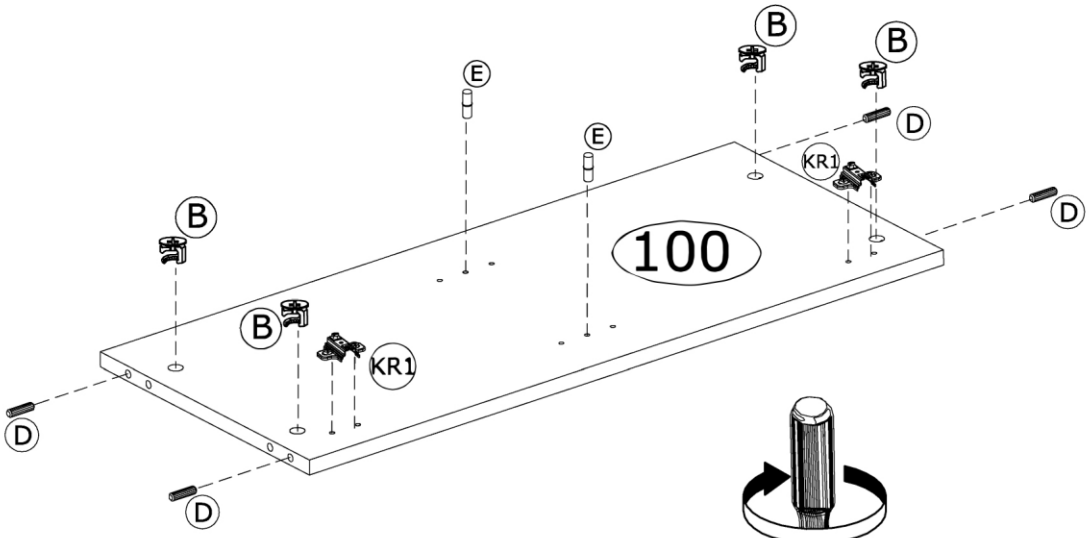

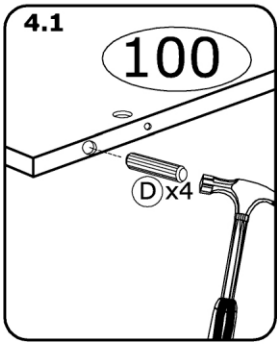

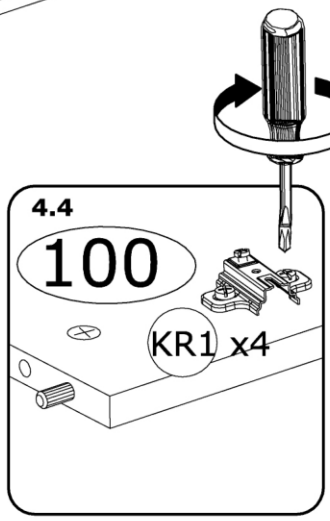

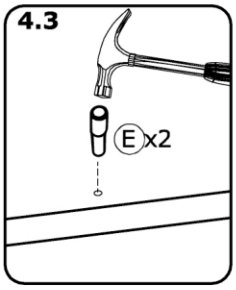

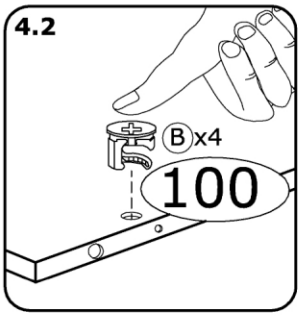

5.

B-4
D-4

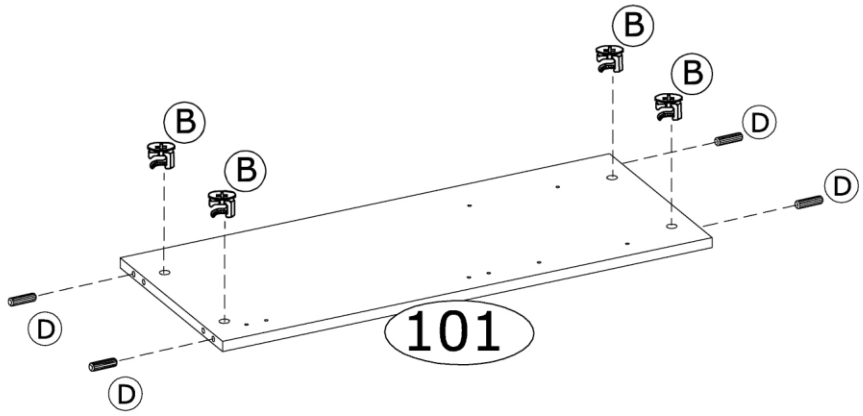
B
B
B
B
D
D
D
D
101

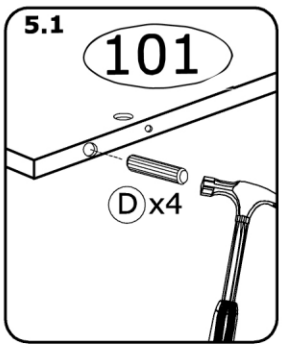
5.1
101
D x4

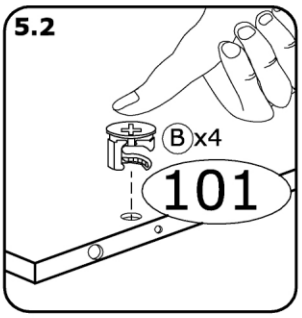
5.2
B x4
101

6.

PR-2

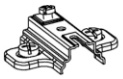
KR1-2

O-4

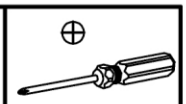

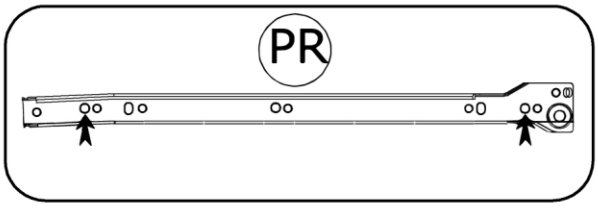
PR

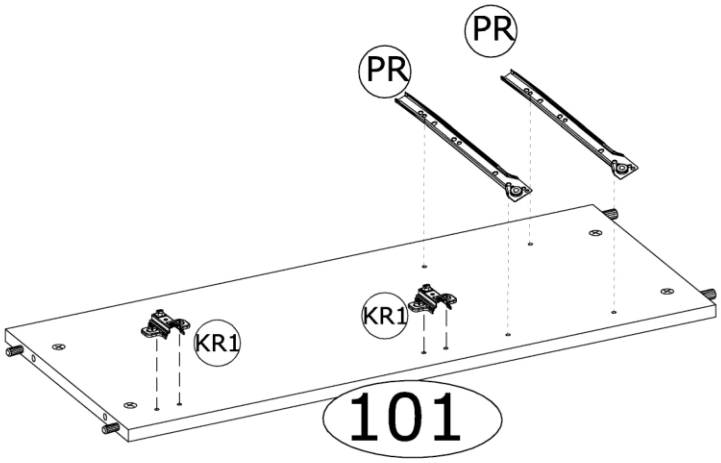
PR
PR
KR1
KR1
101

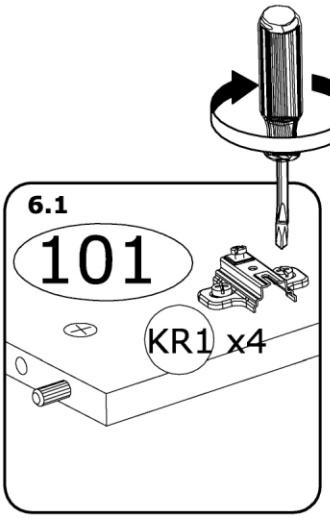
6.1
101
KR1 x4

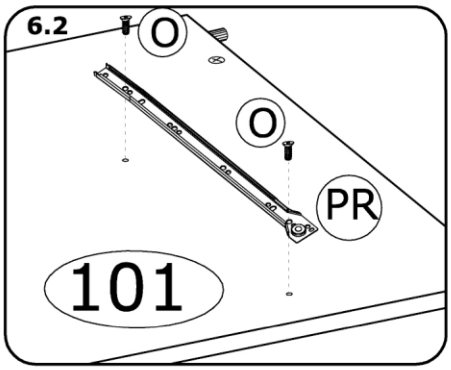
6.2
O
O
PR
101

7.

D-4
E-2

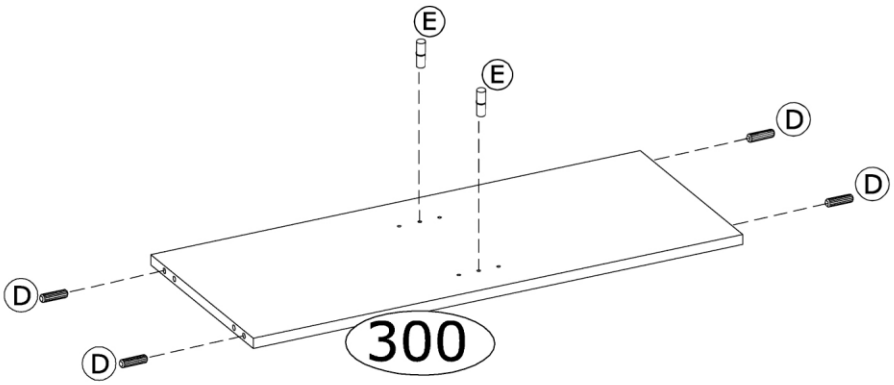
E
E
D
D
D
D
300

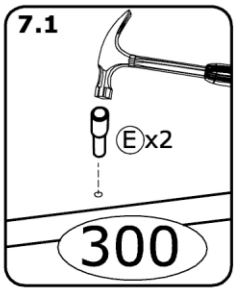
7.1
E x2
300

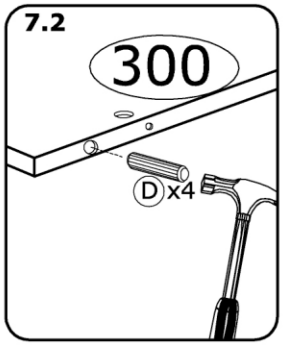
7.2
300
D x4

8.

PR-2

O-44

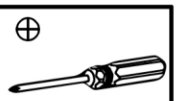

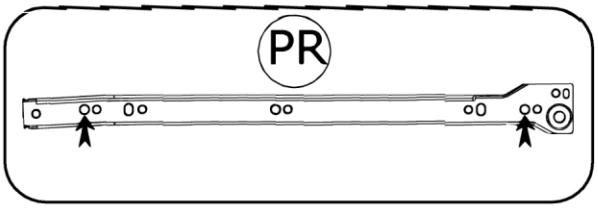
PR

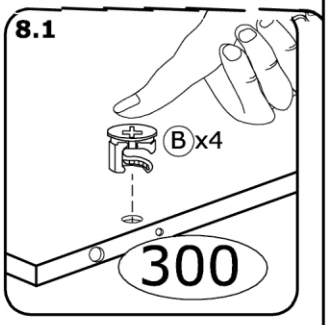
8.1
B x4
300

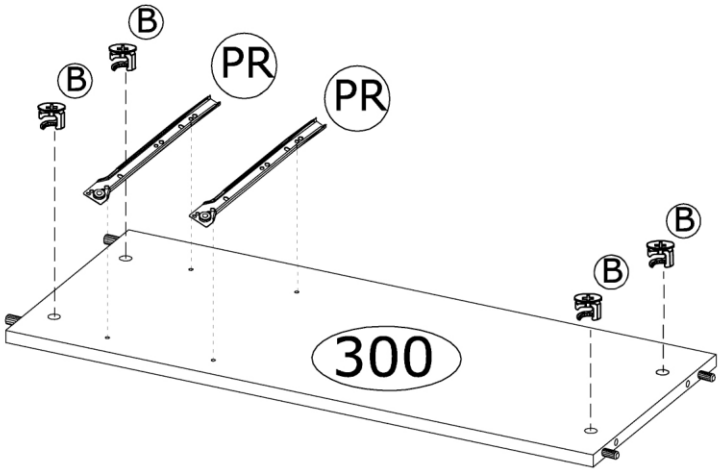
B
B
PR
PR
B
B
300

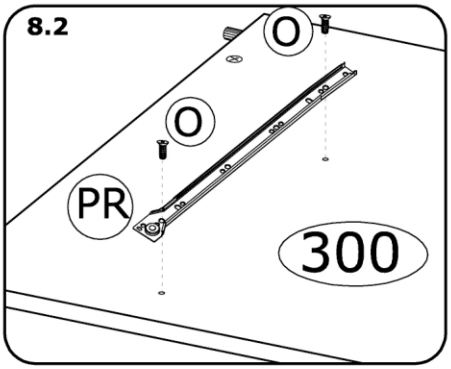
8.2
O
O
PR
300

9.

x2

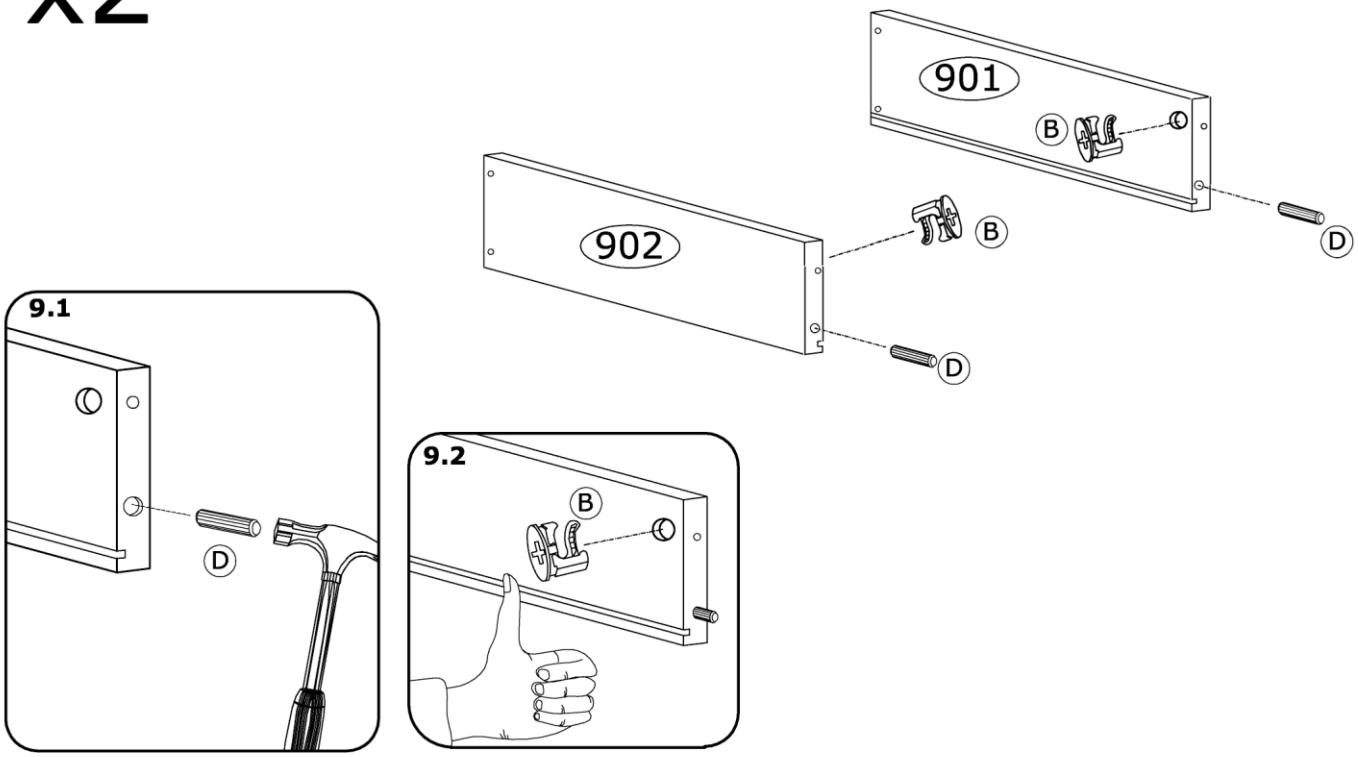

10.

x2

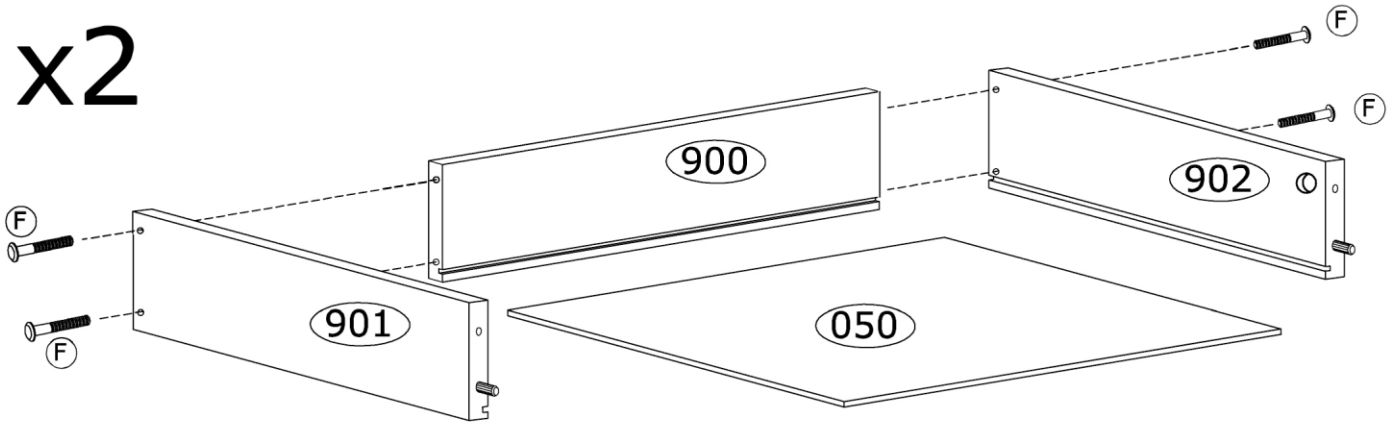

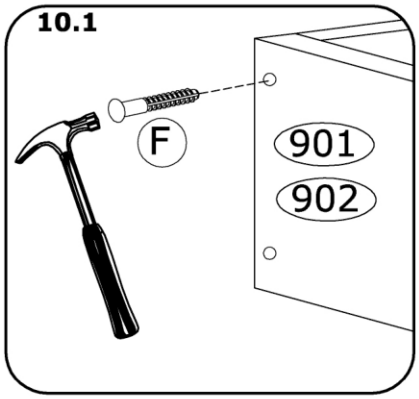

11.

W-2
M 4-

x2

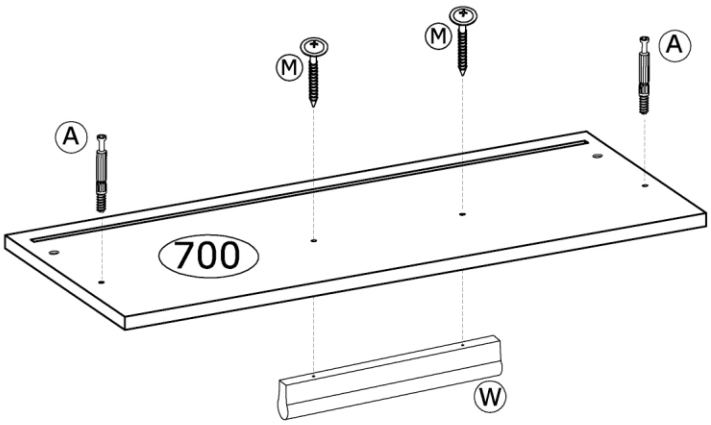
A
M
M
A
700
W

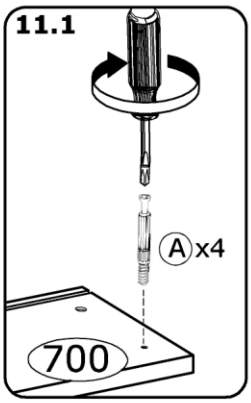
11.1
A x4
700

12.

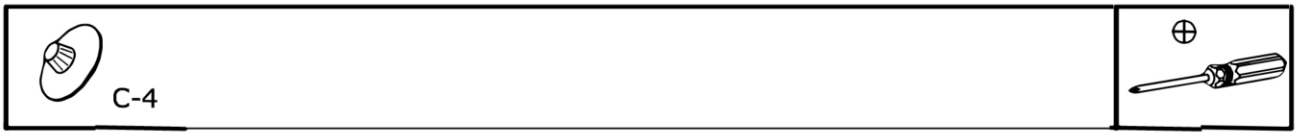
C-4

x2

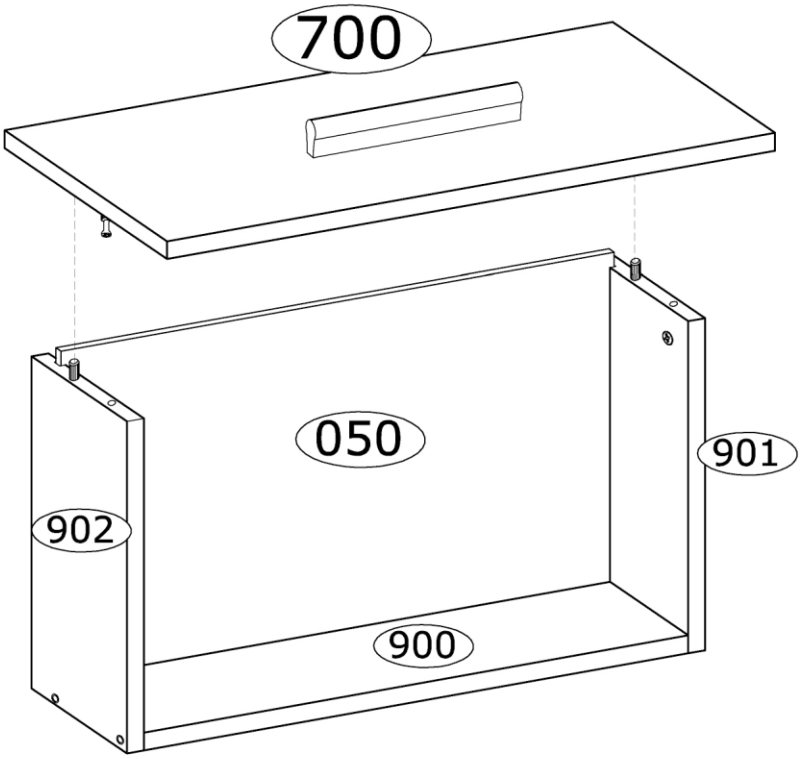
700
050
901
902
900

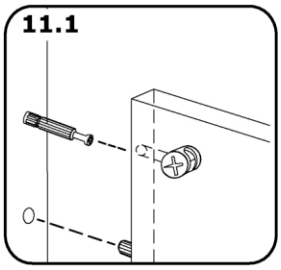
11.1

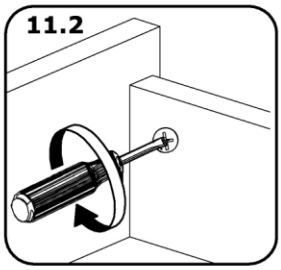
11.2

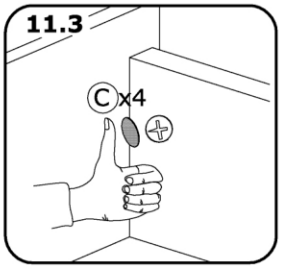
11.3
C x4

13.

PR-2
J-8

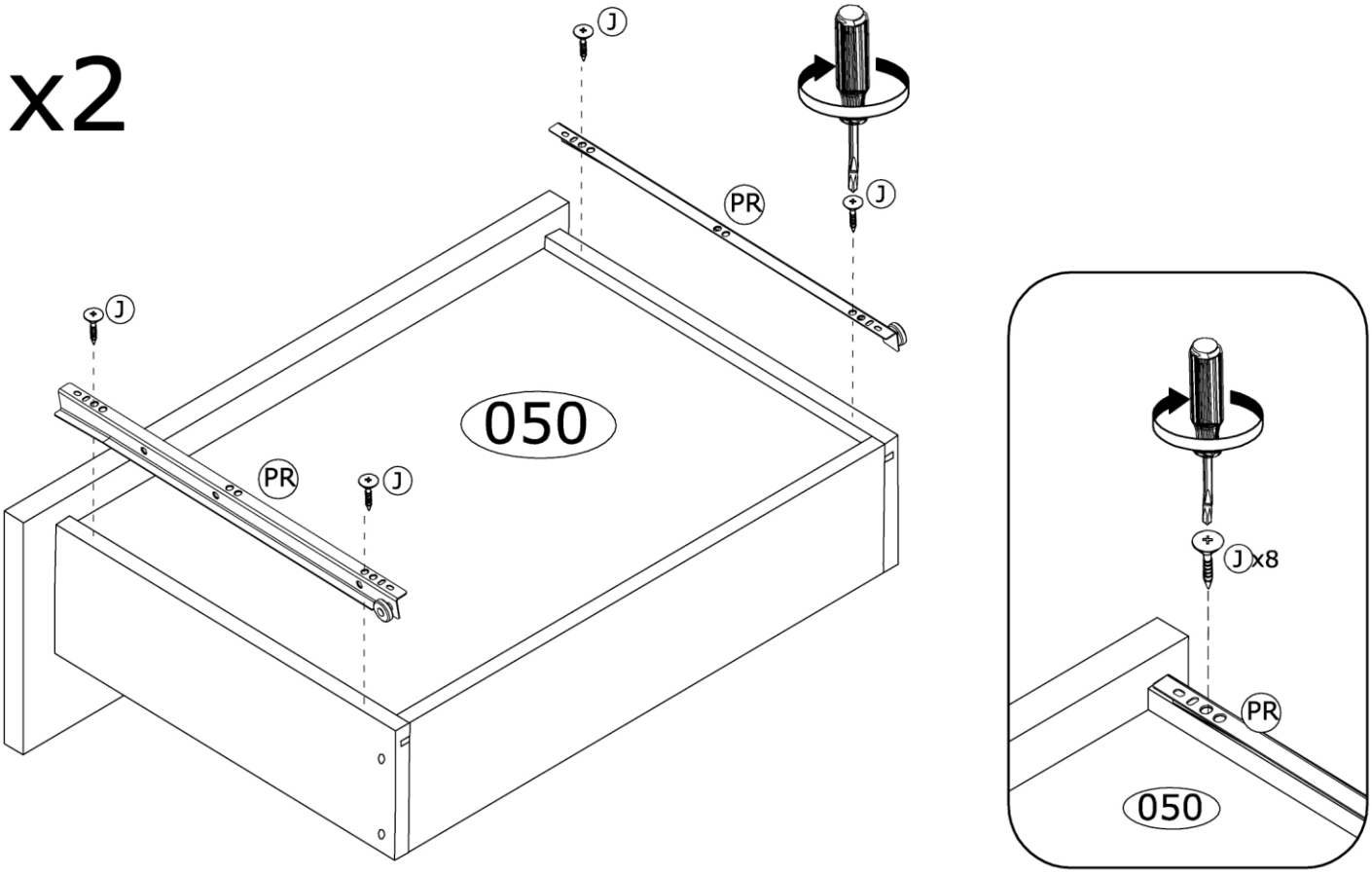
x2
J
PR
J
J
PR
J
050
J x8
PR
050

14.

KR2-2
J-4

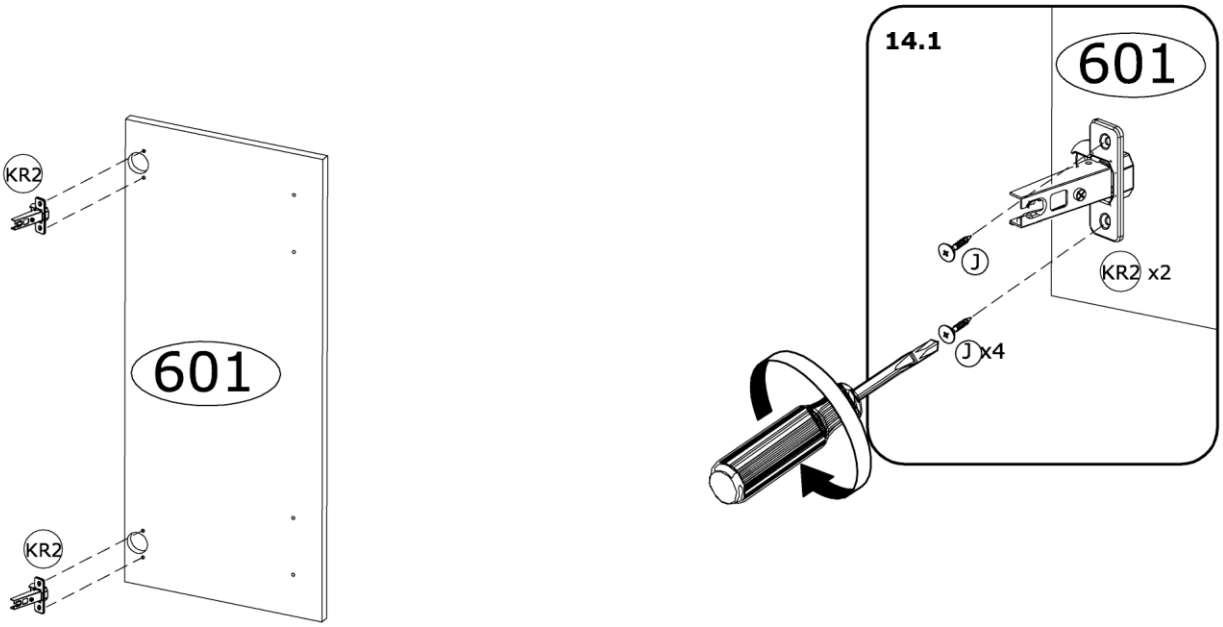
KR2
601
KR2
14.1
601
J
KR2 x2
J x4

15.

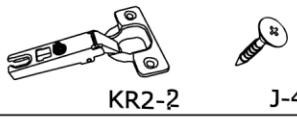

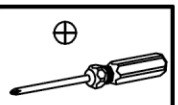

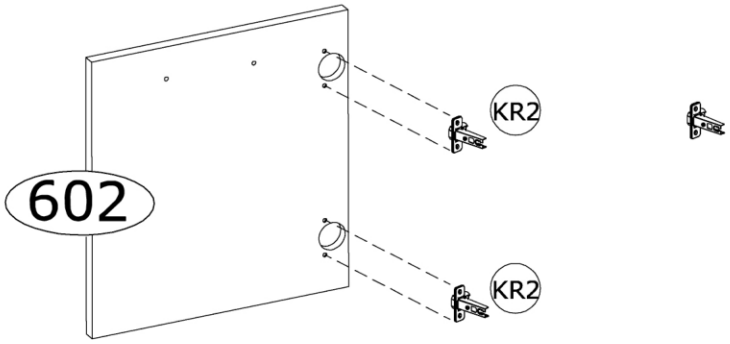

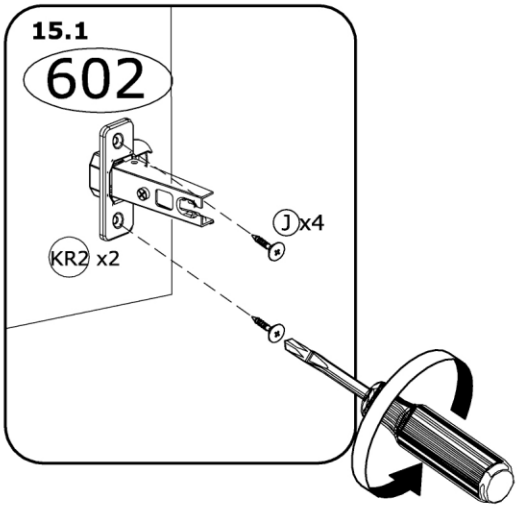

16.

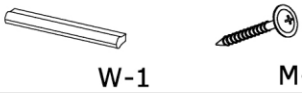

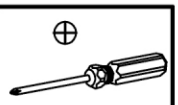

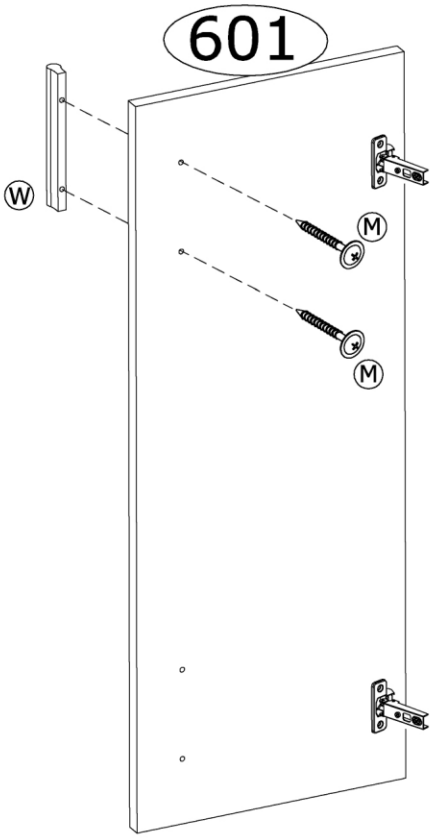

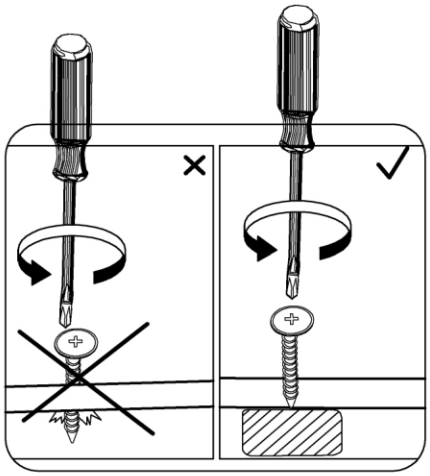

17.

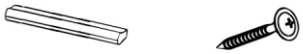

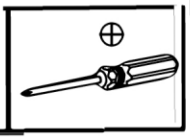

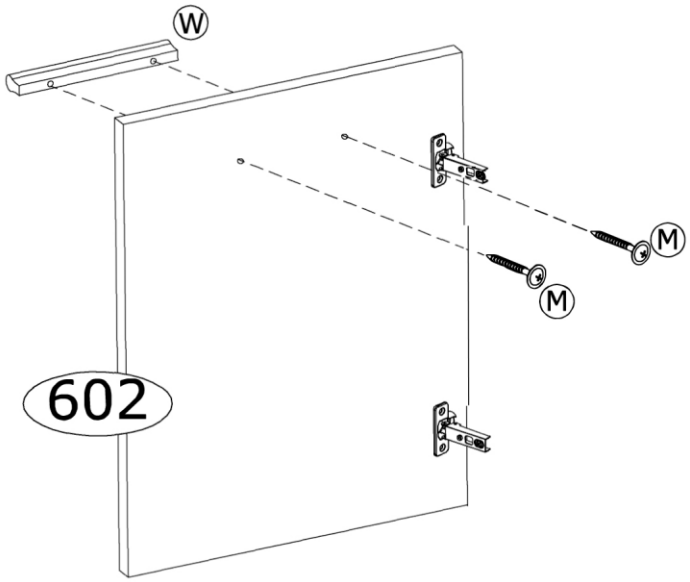

18.

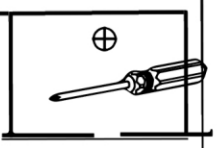

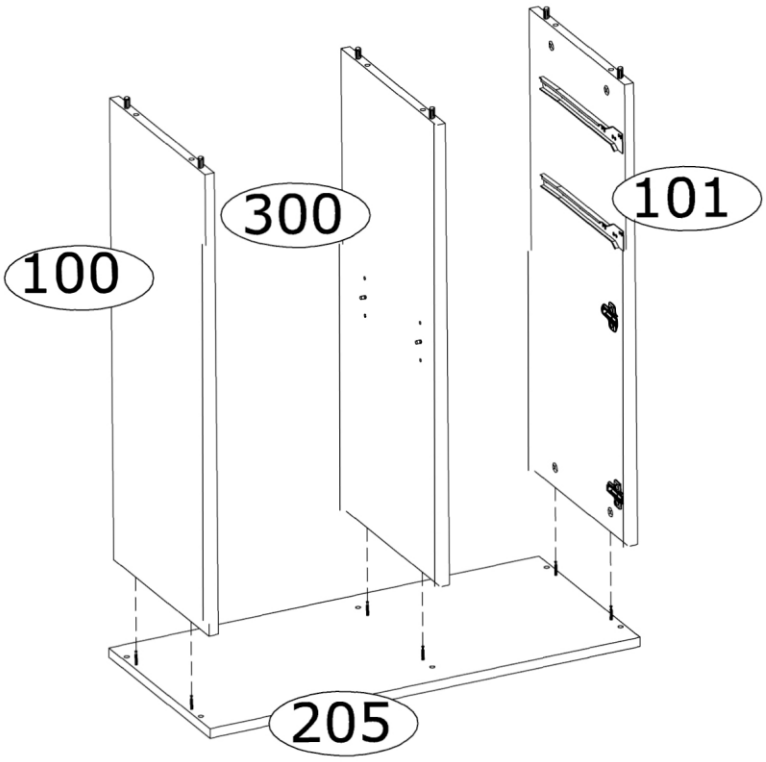

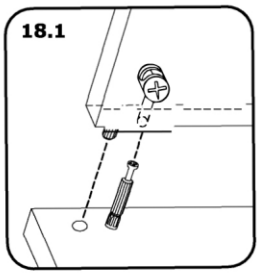

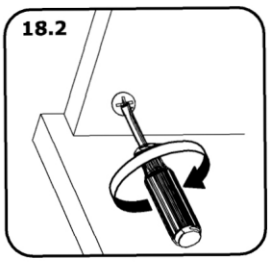

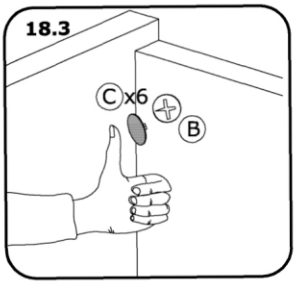

19.

C -6

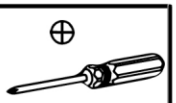

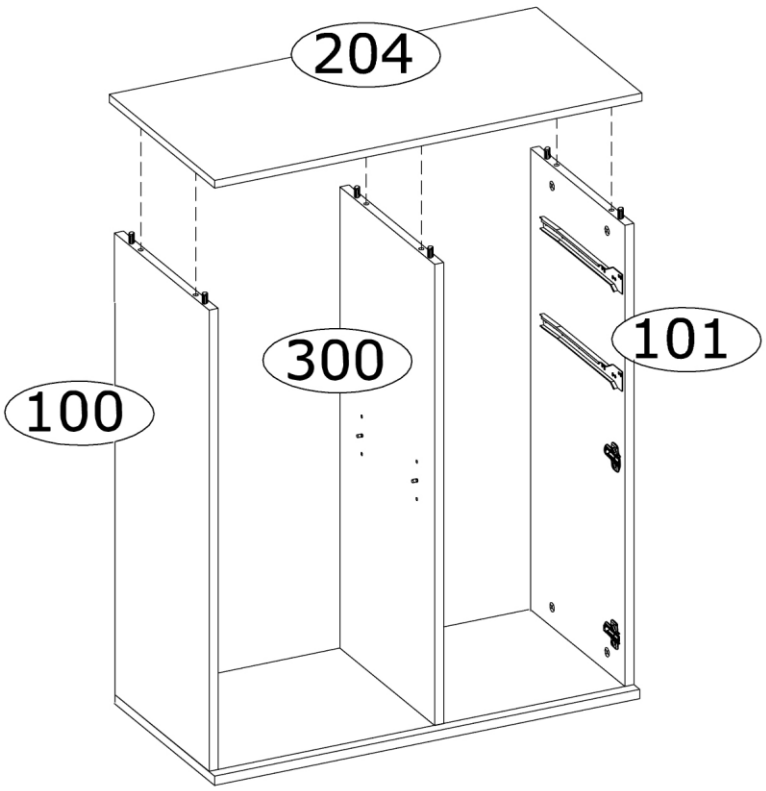

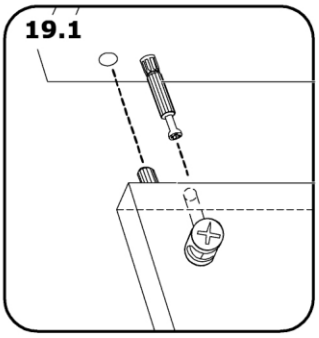

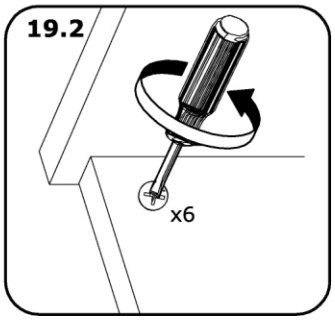

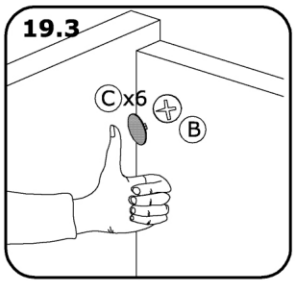

20.

G-21

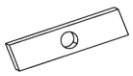

L1-5

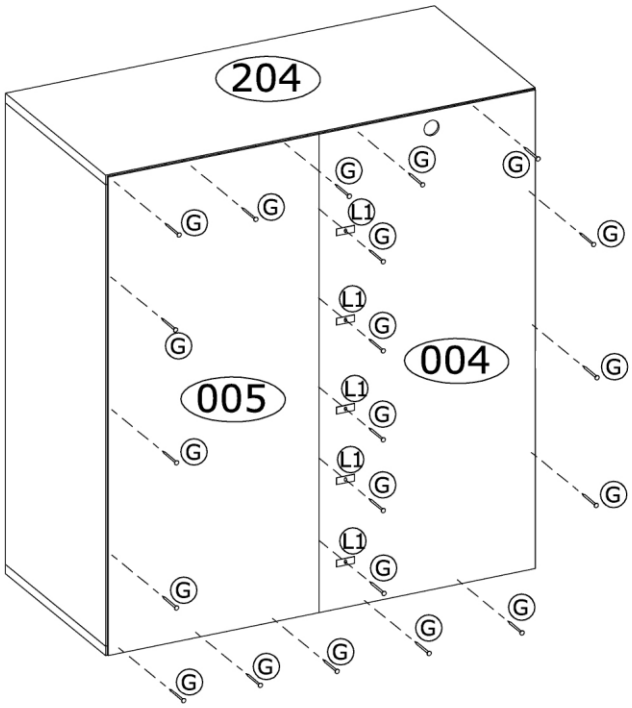

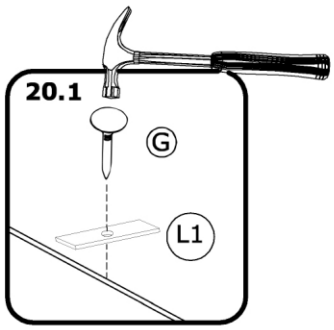

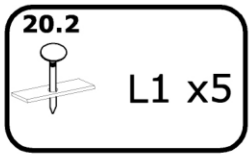

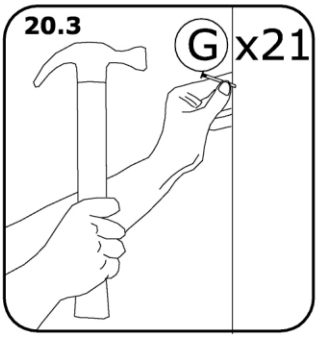

21.

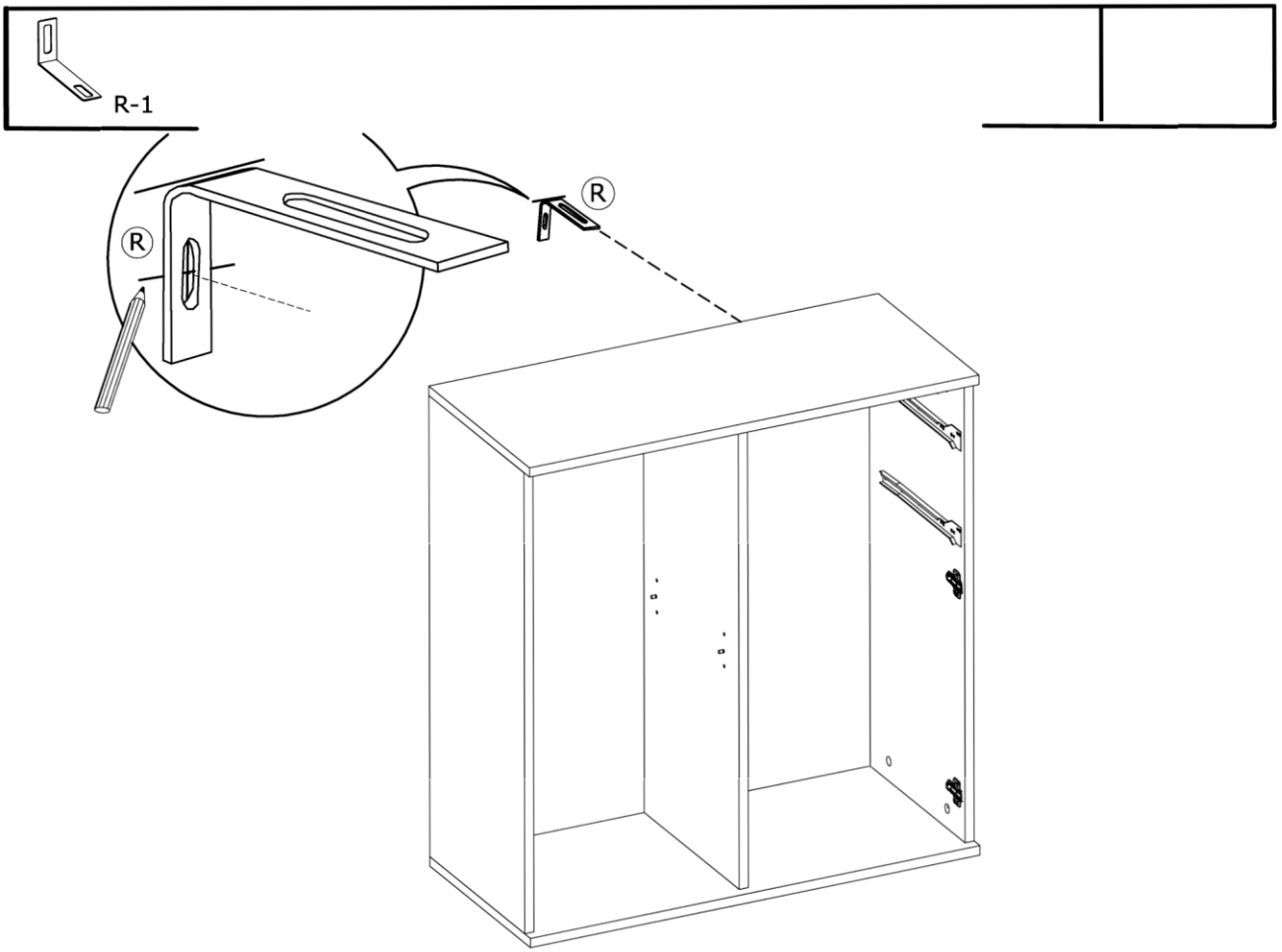

22.

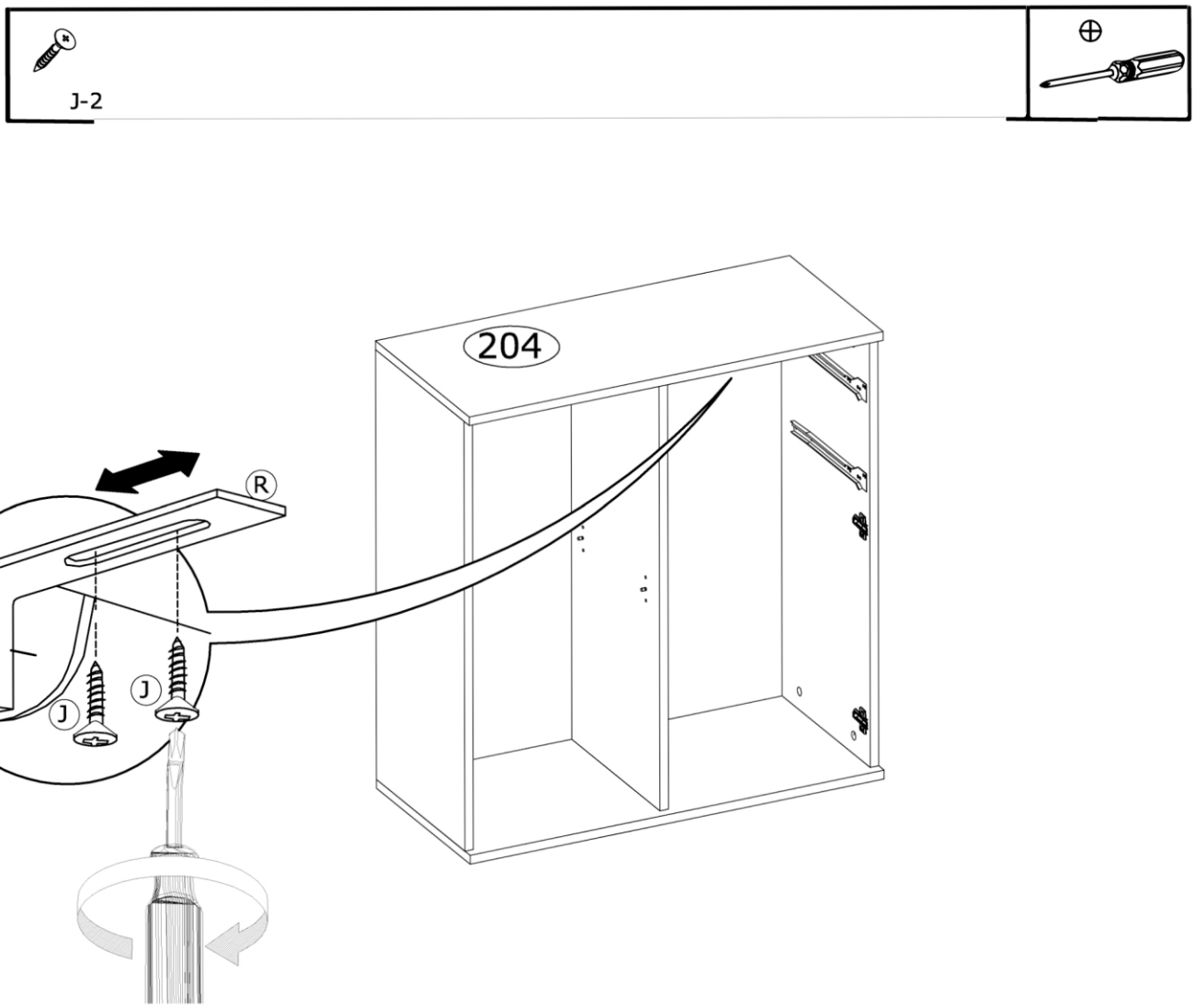

23.

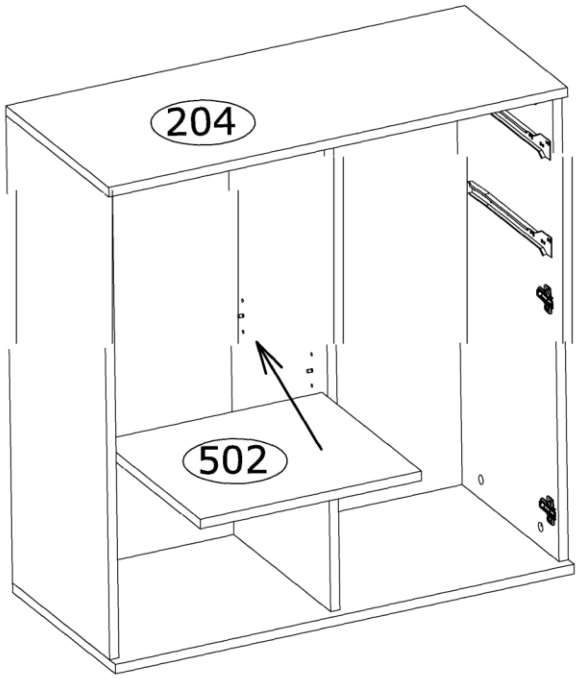

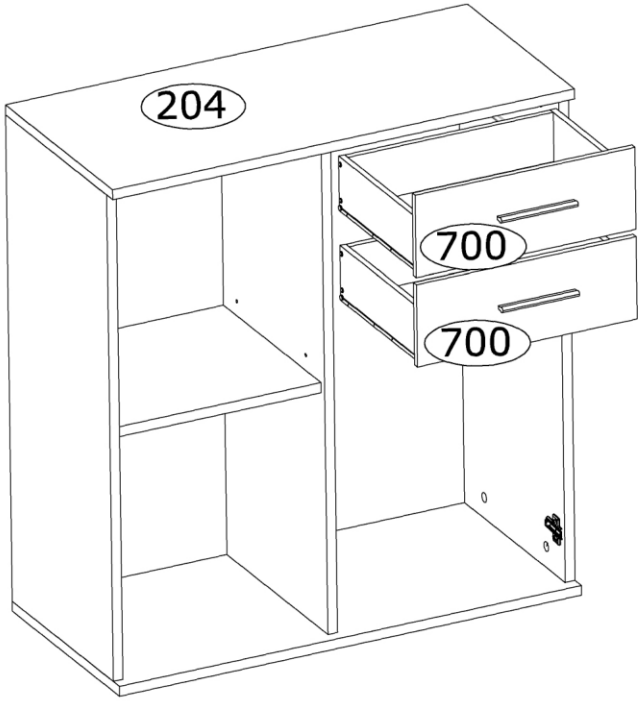

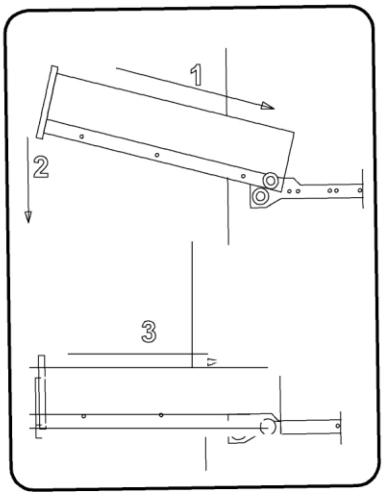
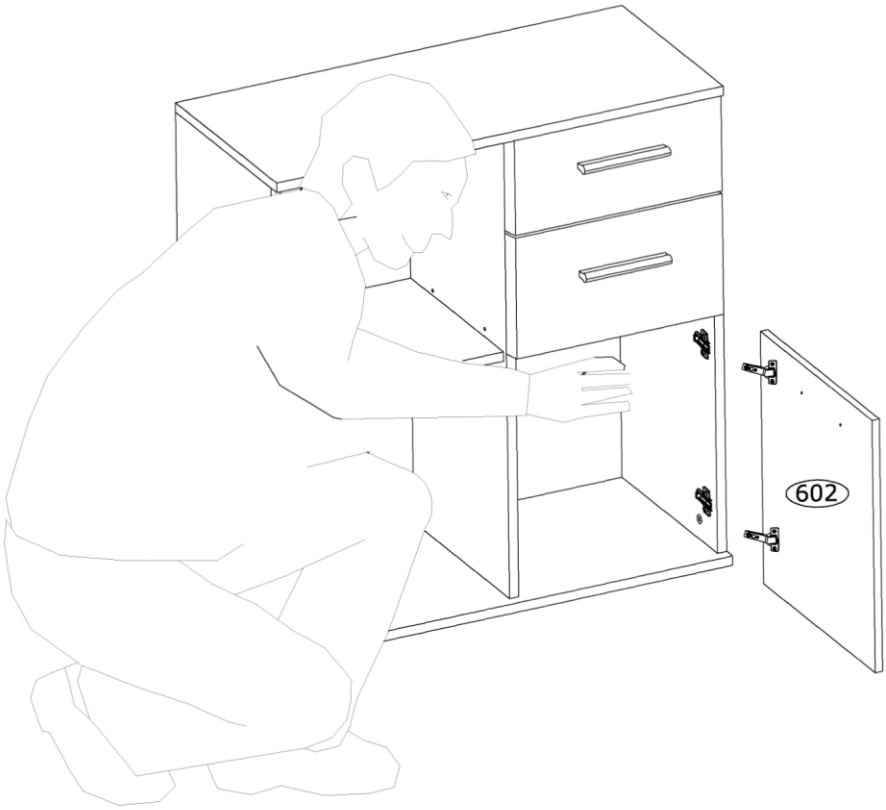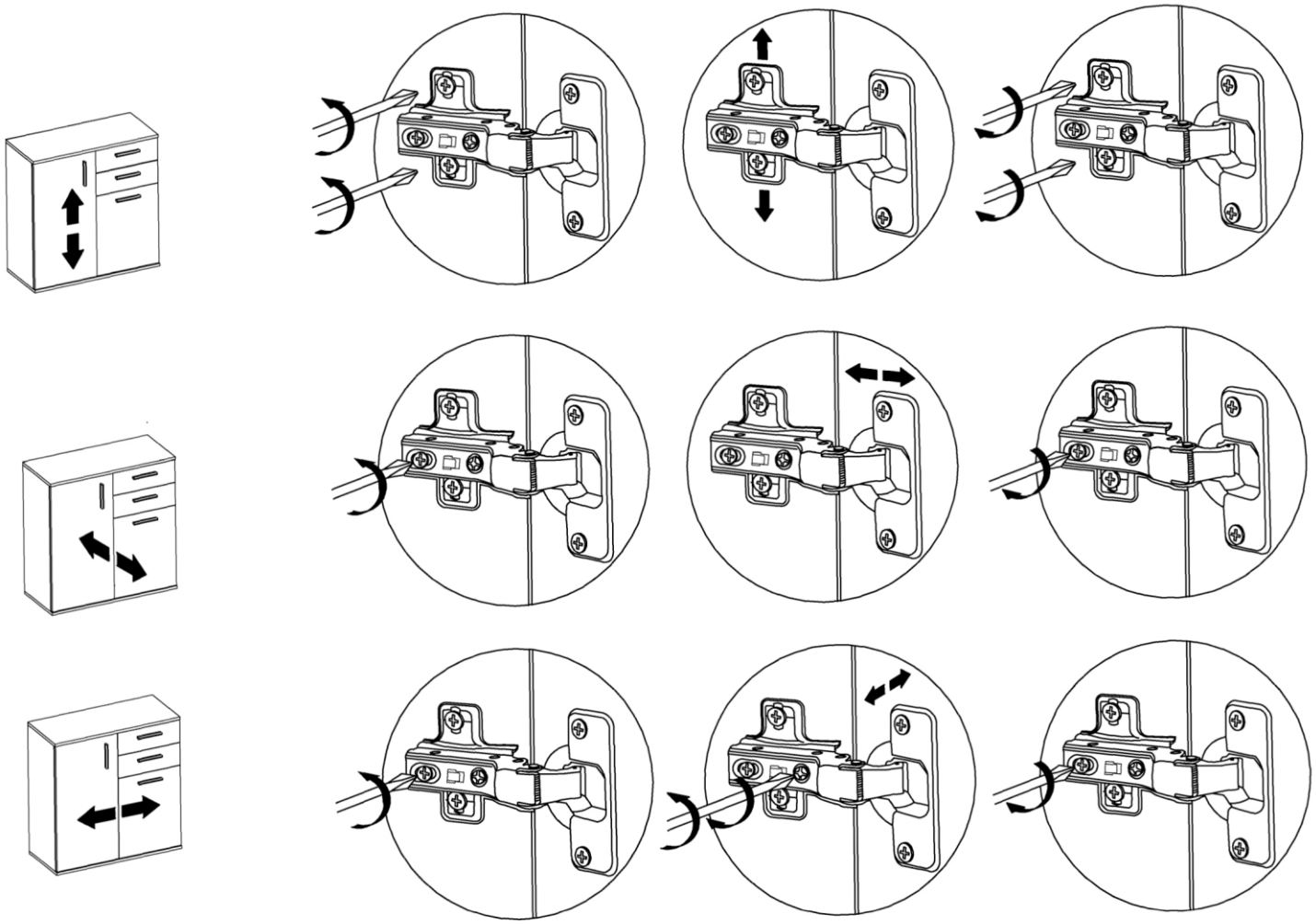
25.