BELTON

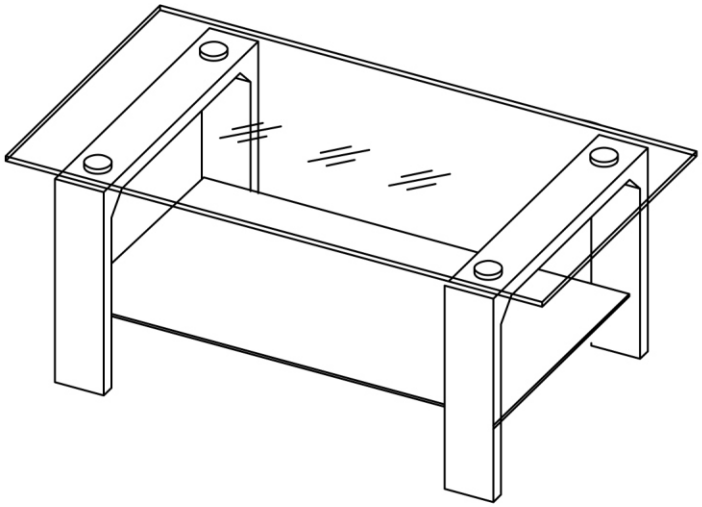

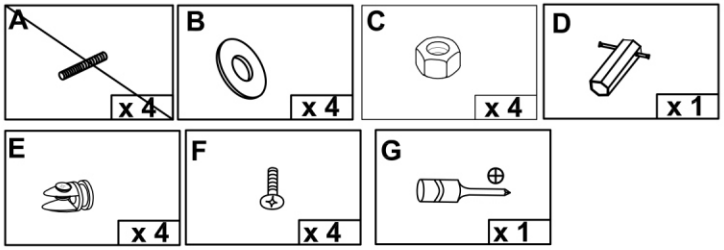

1

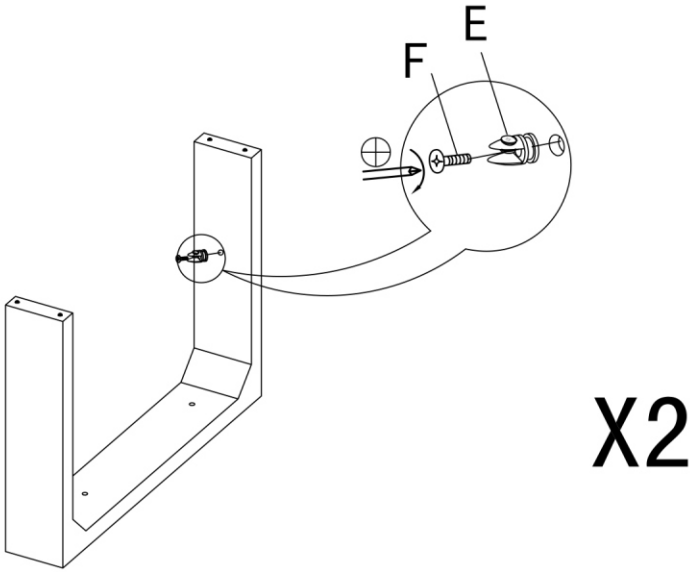

X2

2

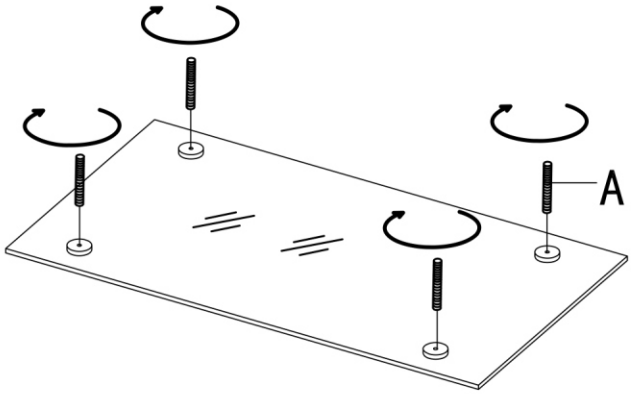

③

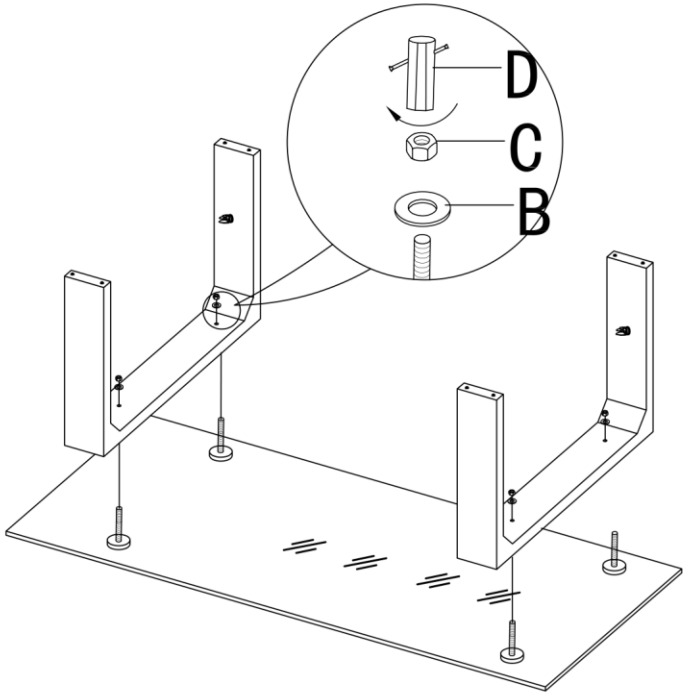

⑤

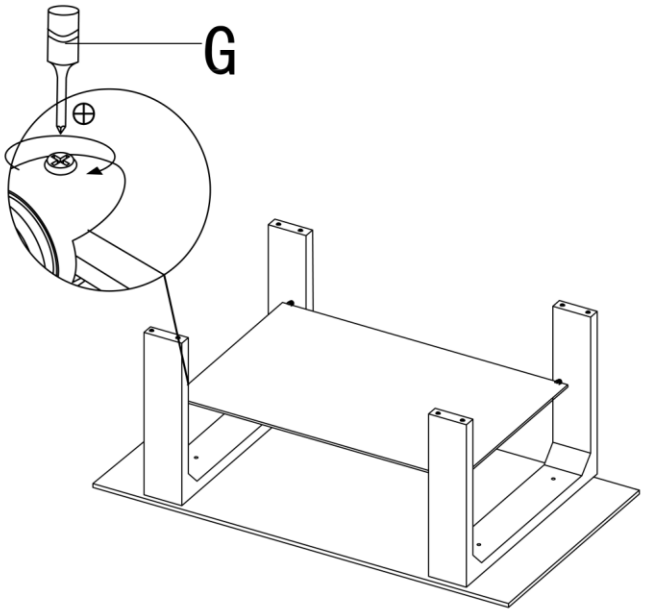

④

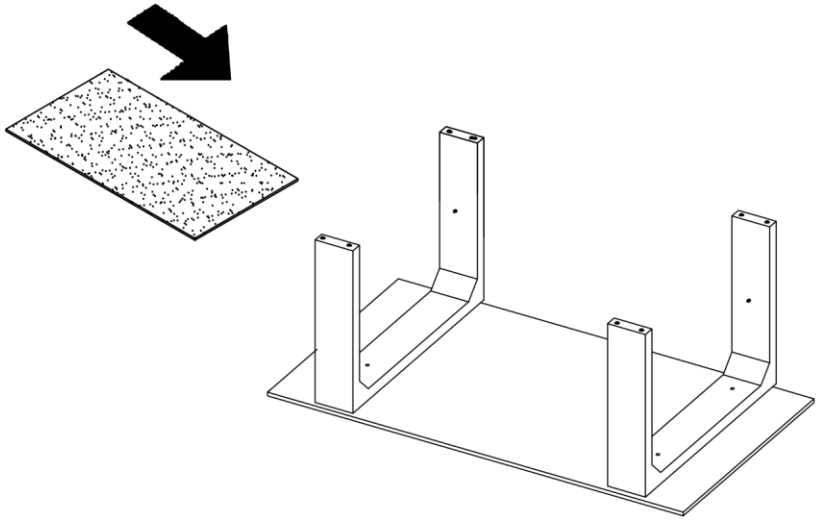
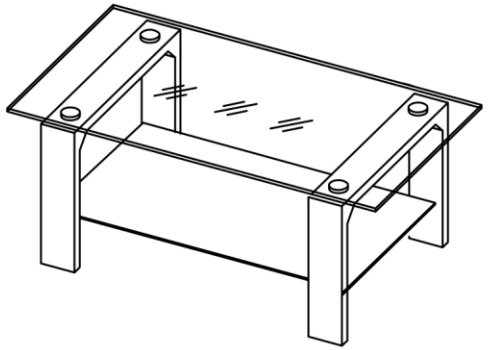
⑥