ADILA

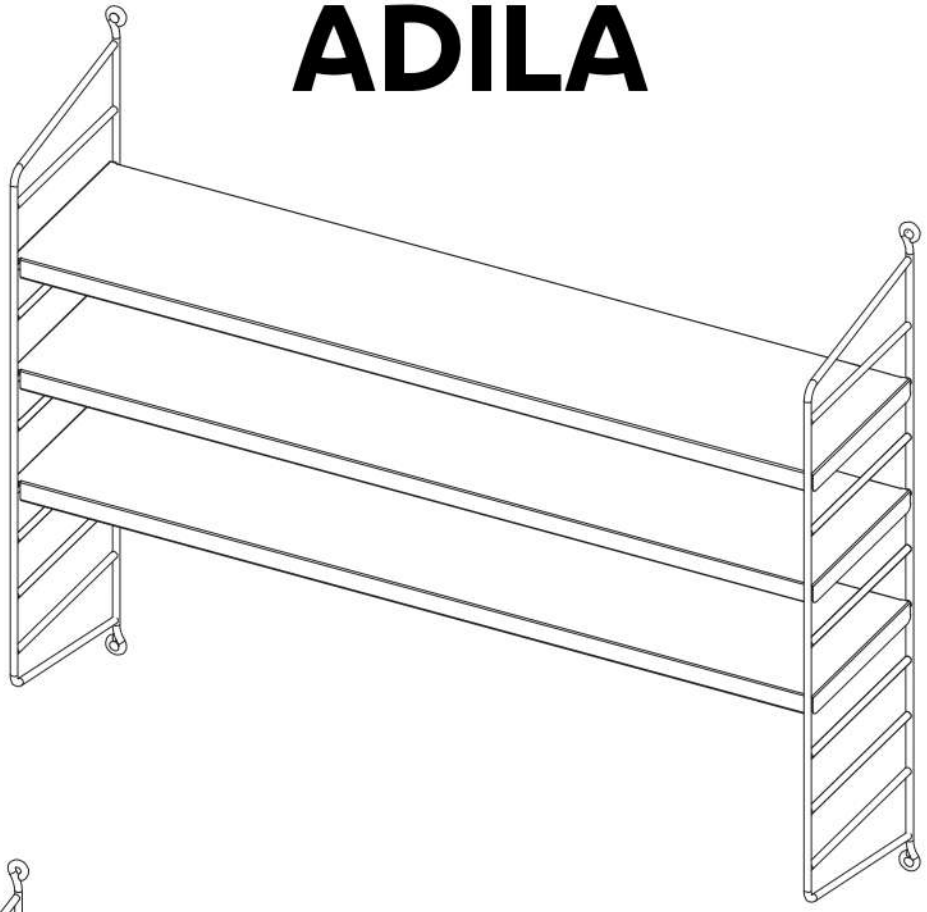

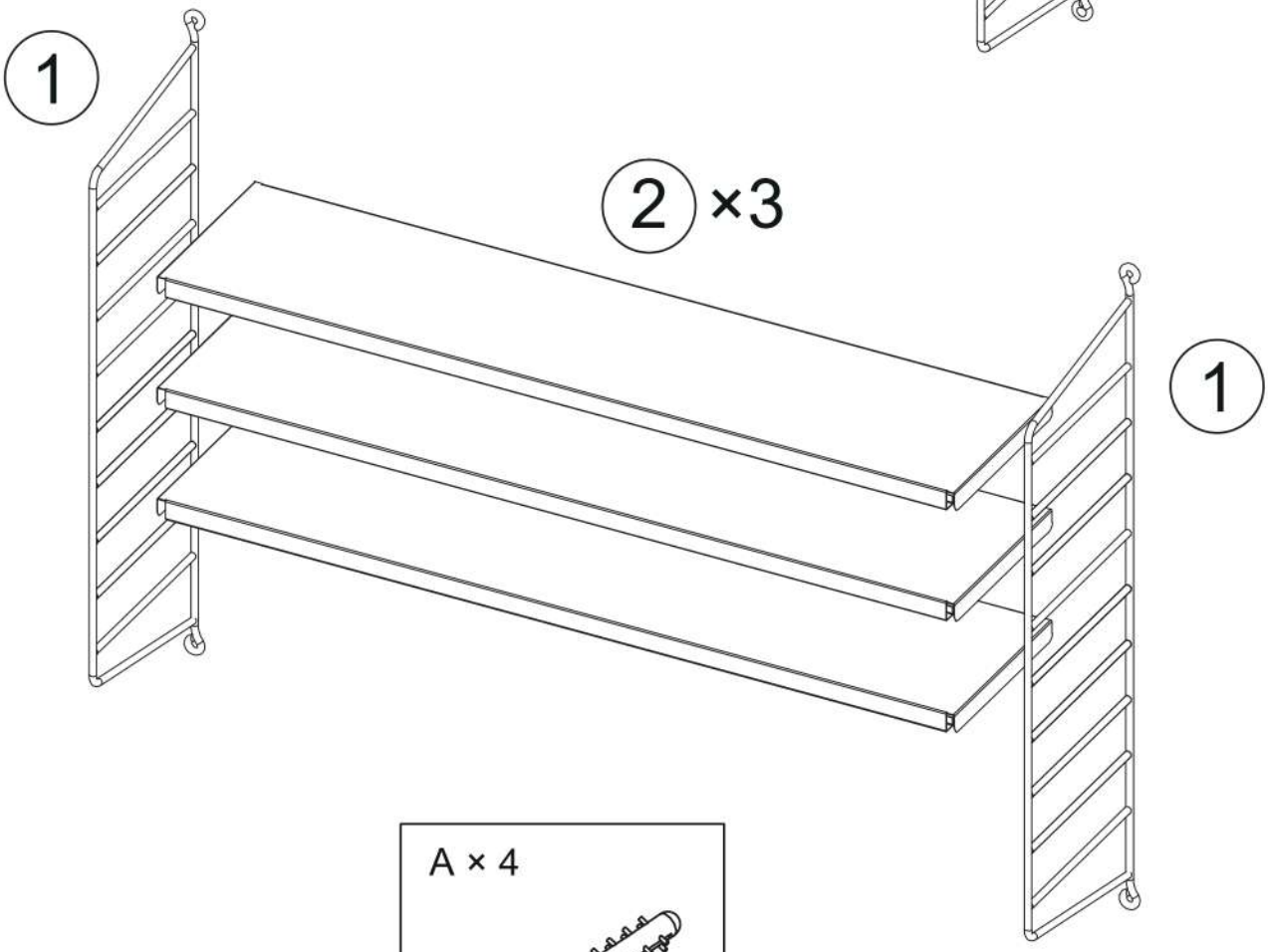

A × 4



M4×30 mm

1

A × 2

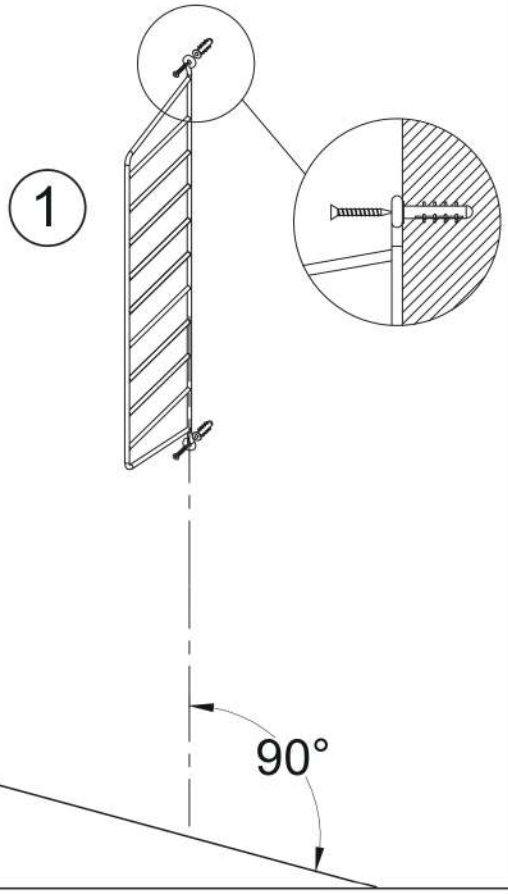

2

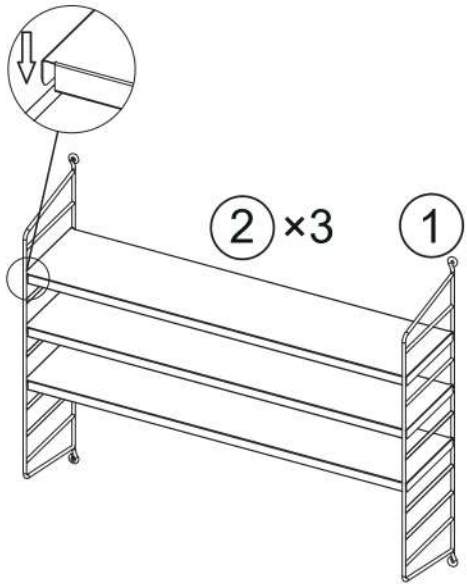

3

A × 2

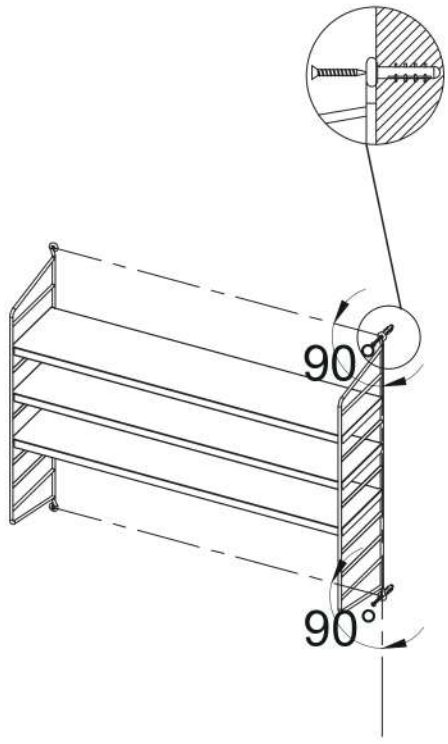

4

