NAMIK

Ax16 M5x8mm	Bx16	Cx4	Dx1	Ex1
Fx1	Gx1	Hx1	IX1	Jx1
Kx1	Lx2	Mx1	Nx1	Ox1
Px1	Qx1	Rx1	Sx2	Tx2 Ux1

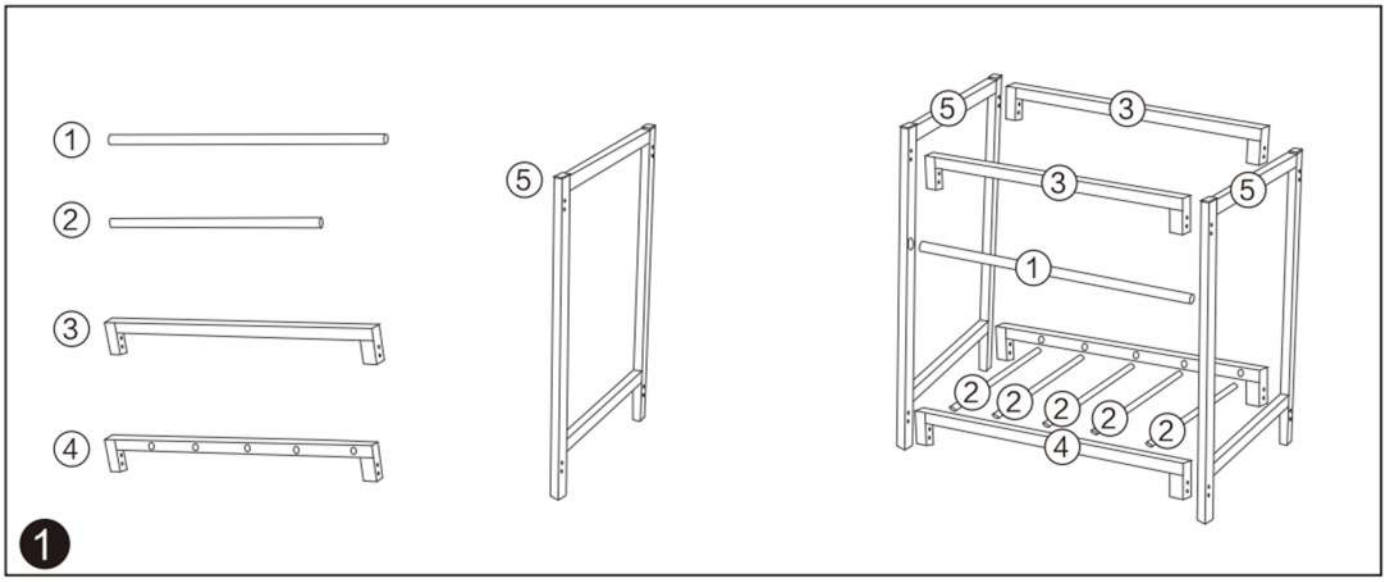

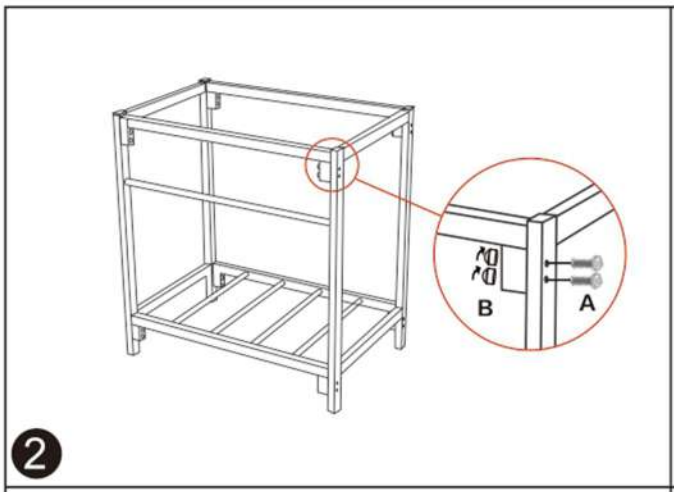
B
A
2

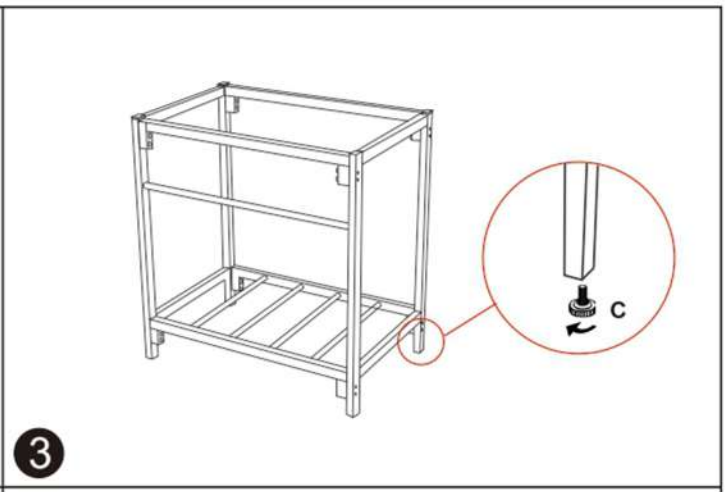
C
3

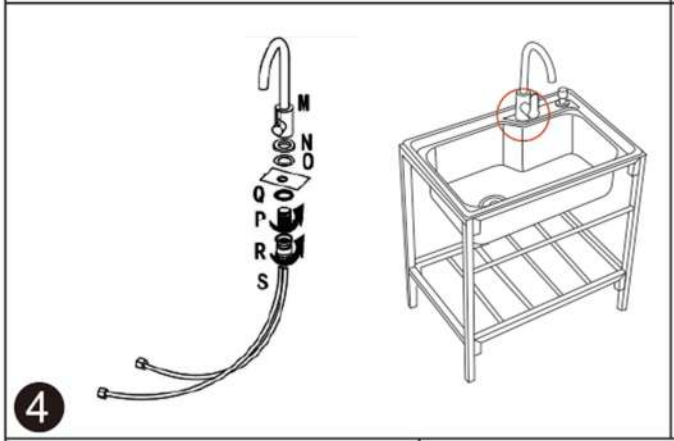
M
N
O
Q
P
R
S
4

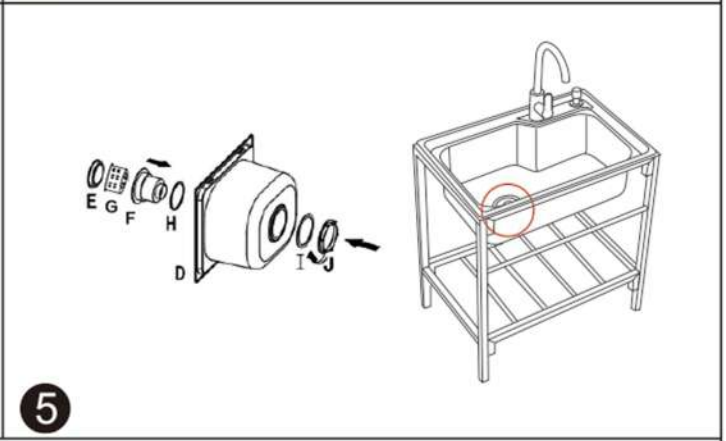
E
G
F
H
D
I
J
5

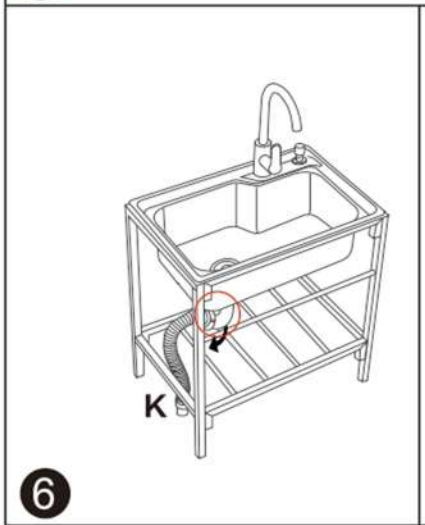
K
6

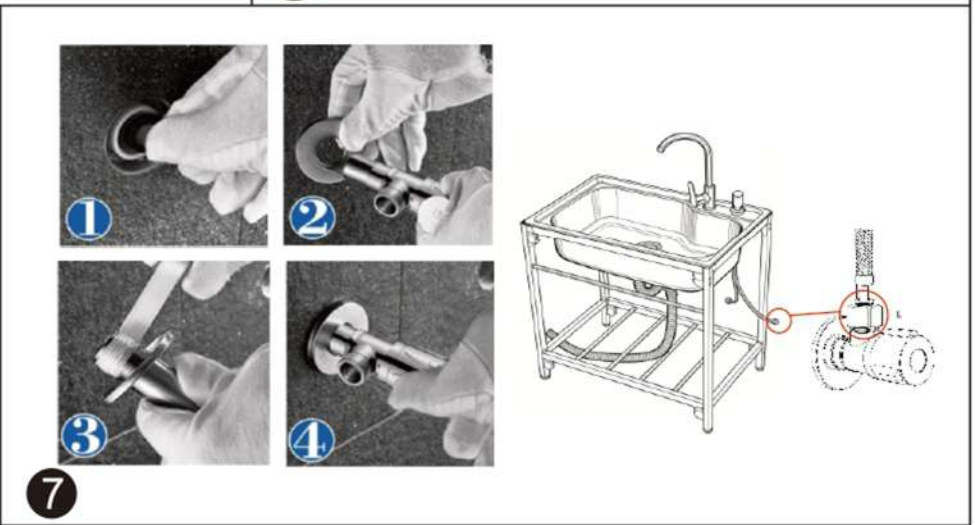
1
2
3
4
7

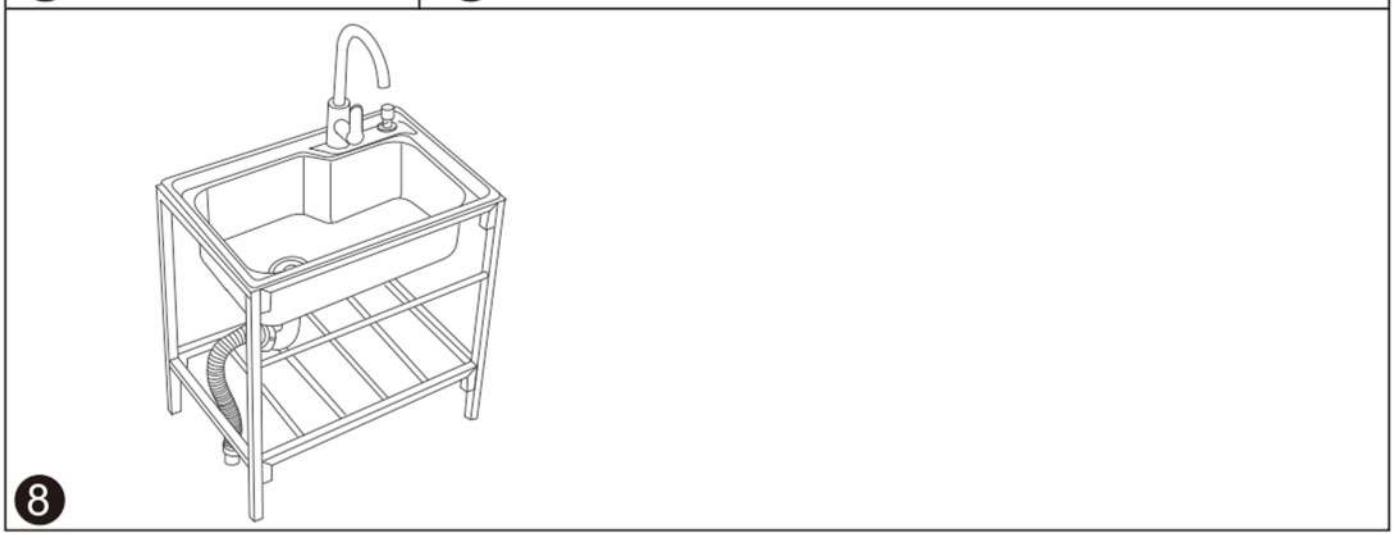
8