DAMON

TS-861

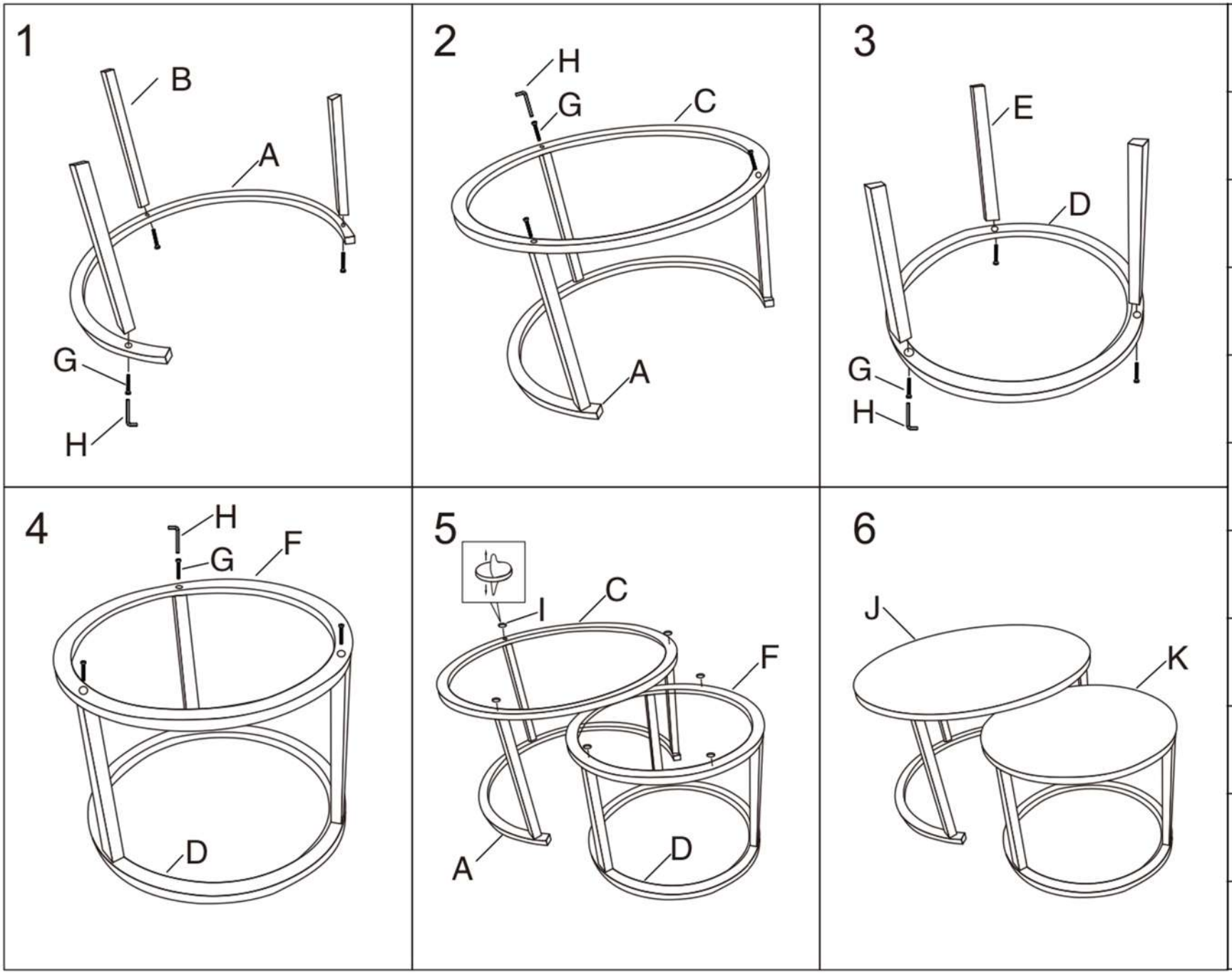

A		1 x
B	39CM	3 x
C		1 x
D		1 x
E	29CM	3 x
F		1 x
G		12 x
H		1 x
I		6 X
J		1 x
K		1 x